W-350H

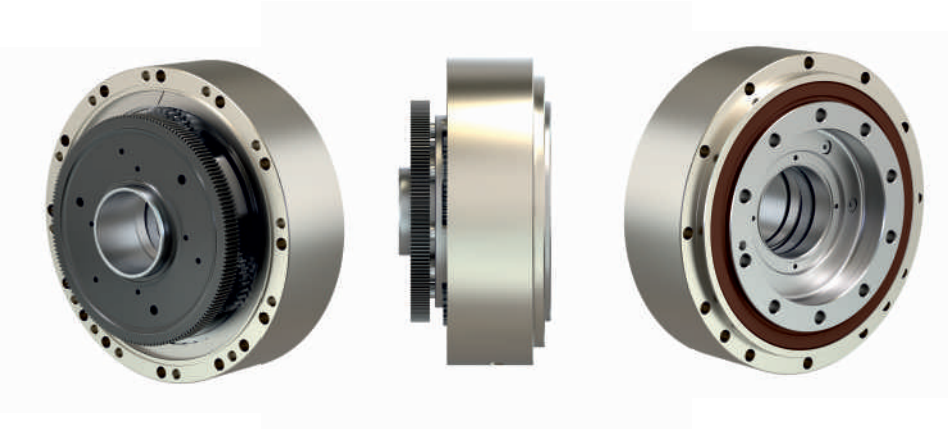

The W hollow shaft reduction gears represent a new transmission mechanism in SPINEA's portfolio. With the W series, we are able to provide a high-precision reduction gears for high-precision applications.

Main parameters of hollow shaft reduction gear W-350H

Size	Rated output torque	Rated output speed	Rated service life	Max acceleration / deceleration torque	Max. permissible torque at emergency / E-stop	Max allowable output speed 1)	Lost motion & Hysteresis lost	Speed ratio of basic reduction gear without pre-stage	Supported overall speed ratios with 1st & 2nd pre-stage wheels
	[Nm]	[rpm]	[hrs]	[Nm]	[Nm]	[rpm]	[arcmin]		
W-350H	3 050	15	6 000	7 625	15 250	30	< 1	38,14	106,39; 158,02; 205,98; 243,52

Main parameters of hollow shaft reduction gear W-350H

Max reduction gear case diameter	Torsional stiffness 50-100% of rated torque. Typical value	Tilting stiffness Typical value	Angular transmission error 2)	Rated tilting moment (at zero radial force & axial force) 3)	Momentary tilting moment (at zero radial force & axial force)	Rated thrust force (at zero tilting moment & radial force) 3)	Rated radial force (at zero tilting moment & axial force) 3)	Central hole diameter	Weight of basic reduction gear / with pre-stage wheels 4)
[mm]	[Nm/arcmin]	[Nm/arcmin]	[arcsec]	[Nm]	[Nm]	[N]	[N]	[mm]	[kg]
ø 350	1 750 - 2 000	13 000 - 16 000	< 45	12 400	24 800	127 000	85 000	90	62,1 / 66,1

RIGHT TO CHANGE WITHOUT PRIOR NOTICE RESERVED

Notes

1) Max allowable output speed may be limited by heat depending on the operating rate.

Make sure the surface temperature of the reduction gear does not exceed case temperature 65 °C during use.

2) The parameter depends on the version of the reduction gear ratio and lost motion

3) Load at output speed 15 rpm and L10=12 000 hrs

4) The parameter values are informative. Exact value depends on the specific version of the reduction gear

W-350H

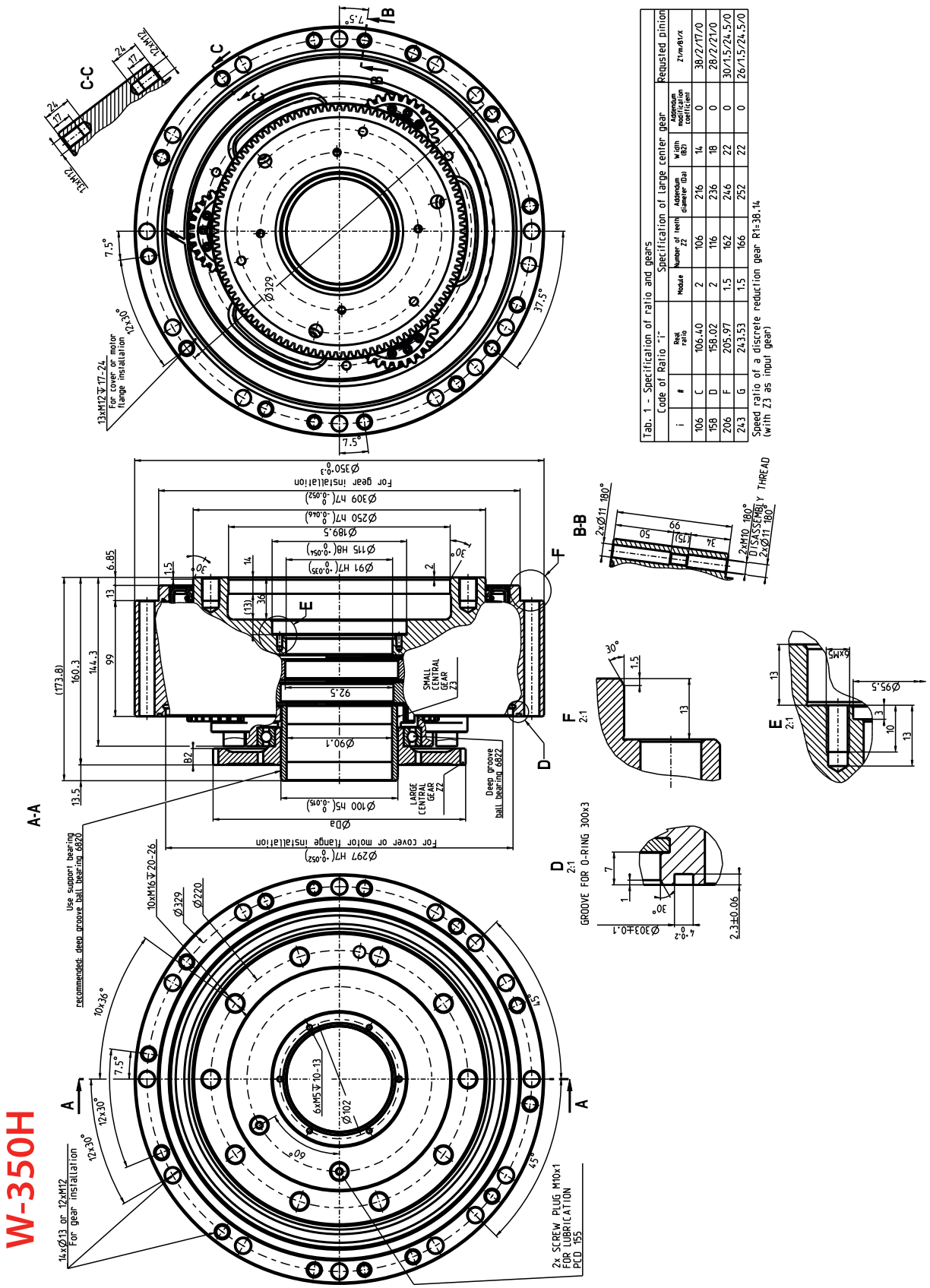

Tab. 1 - Specification of ratio and gears

Code of Ratio "i"			Specification of large center gear					Requsted pinion
i	#	Real ratio	Module	Number of teeth Z2	Addendum diameter (Da)	Width (B2)	Addendum modification coefficient	Z1xm.61xX
106	C	106.40	2	106	216	14	0	38/2/17/0
158	D	158.02	2	116	236	18	0	28/2/21/0
206	F	205.97	1.5	162	246	22	0	30/1.5/24.5/0
243	G	243.53	1.5	166	252	22	0	26/1.5/24.5/0

Speed ratio of a discrete reduction gear R1=38.14
(with Z3 as input gear)

For this drawing we reserve all rights. Without our permission it may neither be copied nor made accessible to third persons.
All patent trademark and other right in this drawing and are expressly reserved by SPINEA Ltd.

W-350HSS

SEALED

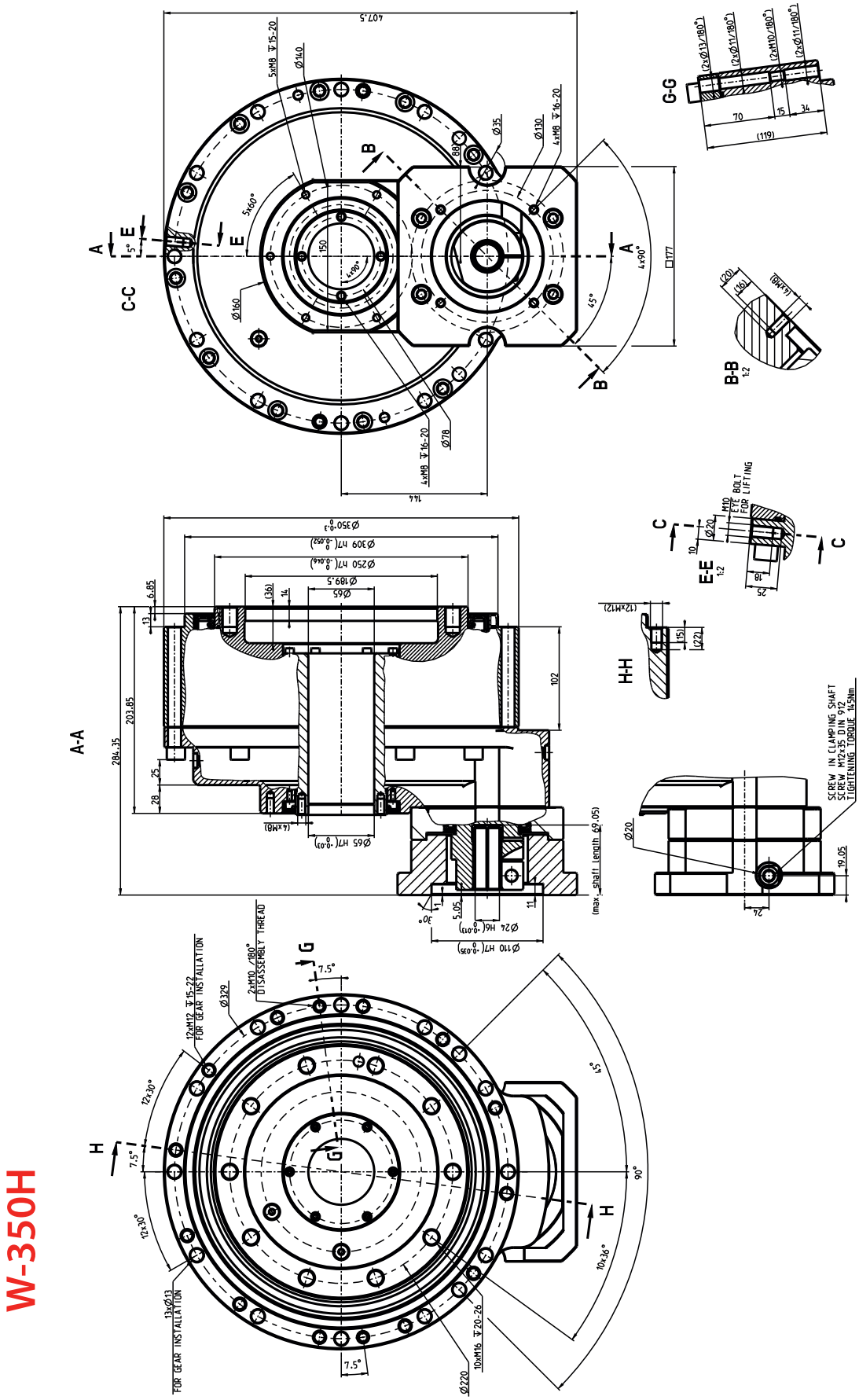

For this drawing we reserve all rights. Without our permission it may neither be copied nor made accessible to third persons.
All patent trademark and other right in this drawing and are expressly reserved by SPINEA Ltd.